YUN CANG
Lagersystem

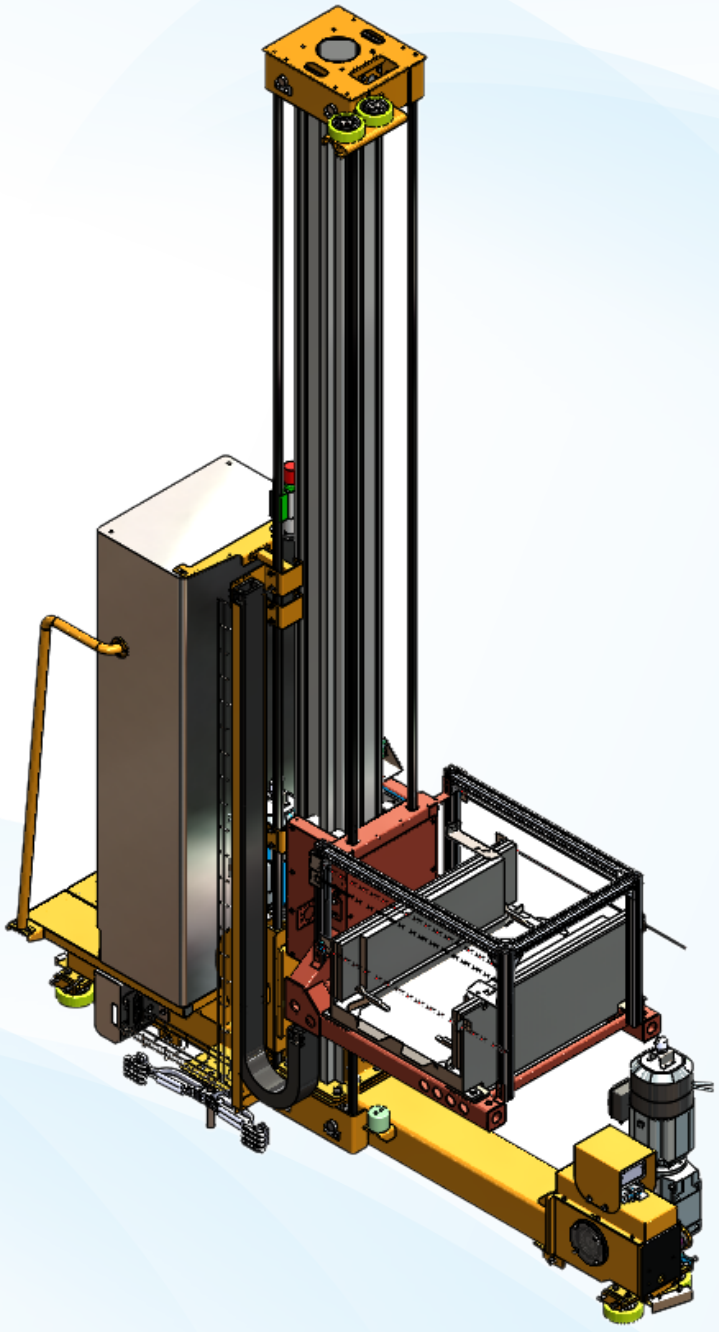

SINGLE COLUMN
MINILOAD STACKER



Lighter Weight

The stacker crane achieves a lighter weight through a lightweight design, incorporating customized aluminum profiles for the mast and floor rails.

Quieter Operation

Featuring NDI polyurethane running and guide wheels, the stacker runs faster and quieter with silent chains (inverted tooth chain).

Higher Efficiency

Double driver system enables a maximum travel acceleration of up to 3.0 m/s², making the stacker crane operate more efficiently.

Safer Operation

The dual-chain lifting system design with loose/broken chain protection and power-off braking for safer lifting operations.

Pre-loaded Control Program

Shipped with the control program pre-installed and simply debugged at the factory. Remote support is available for on-site commissioning.

Suitable for Cold Storage

From design to material and component selection, the stacker crane is adapted to low-temperature environments down to -25°C.
Stacker cranes can be used in cold storage environments.

SINGLE COLUMN MINILOAD STACKER

Lifting stroke
up to 9.5 m

Lifting capacity
max. 100 kg

Picking devices
telescopic forks (single-/double-deep)
telescopic gripper arm (single-/double-deep)

Number of drive units
max. 2

Traveling speed
max. 300 m/min

Traveling acceleration
max. 3.0 m/s2(double driver)

Ascending/descending speed
max. 180 m/min
(inverted tooth chain driver)

Ascending/descending acceleration
max. 3.0 m/s2

Cold store model
for temperatures down to -25 °C

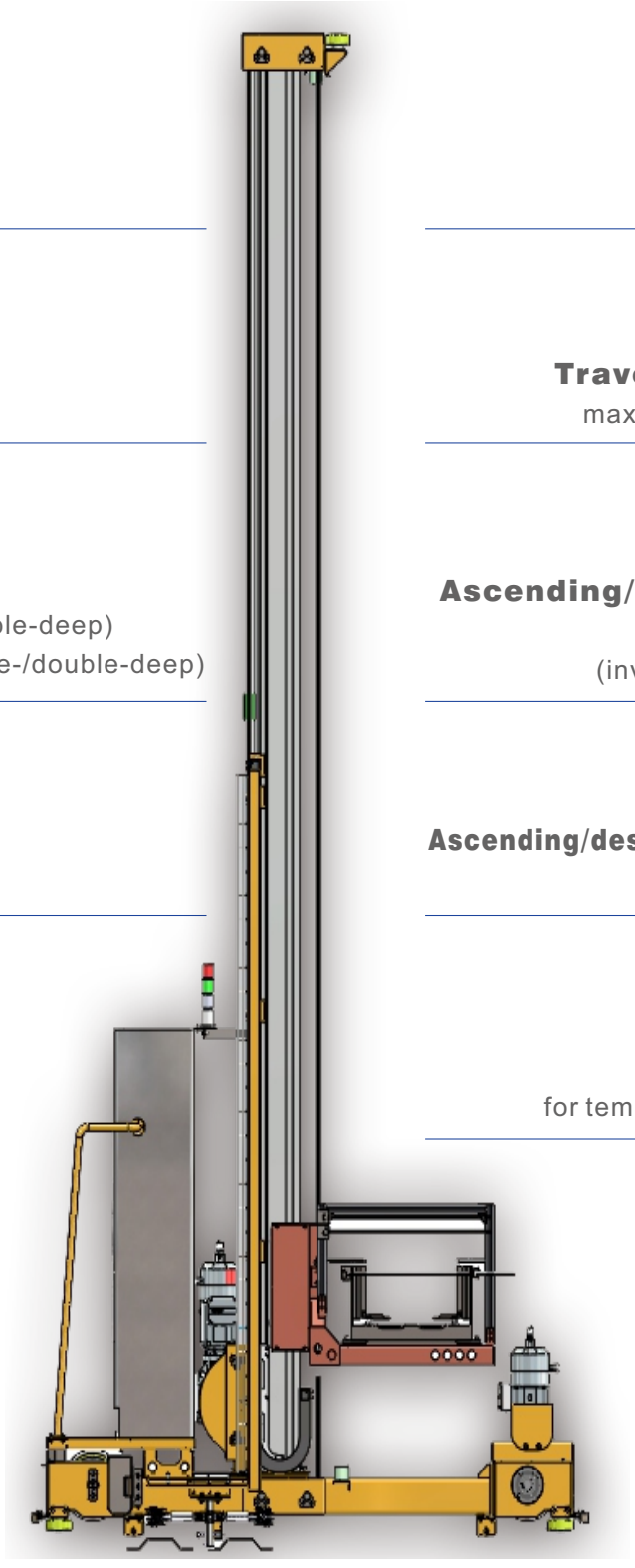

SINGLE COLUMN MINILOAD STACKER

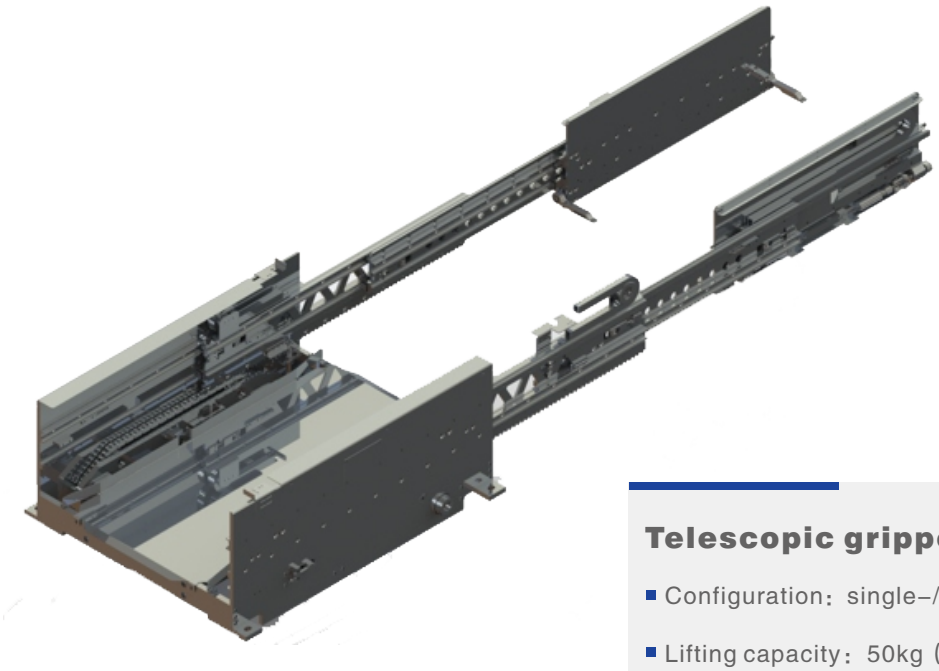

Telescopic gripper arm

- Configuration：single–/double–deep/ Variable–spacing
- Lifting capacity：50kg（MAX）
- Minimum box：300*200*60（mm）

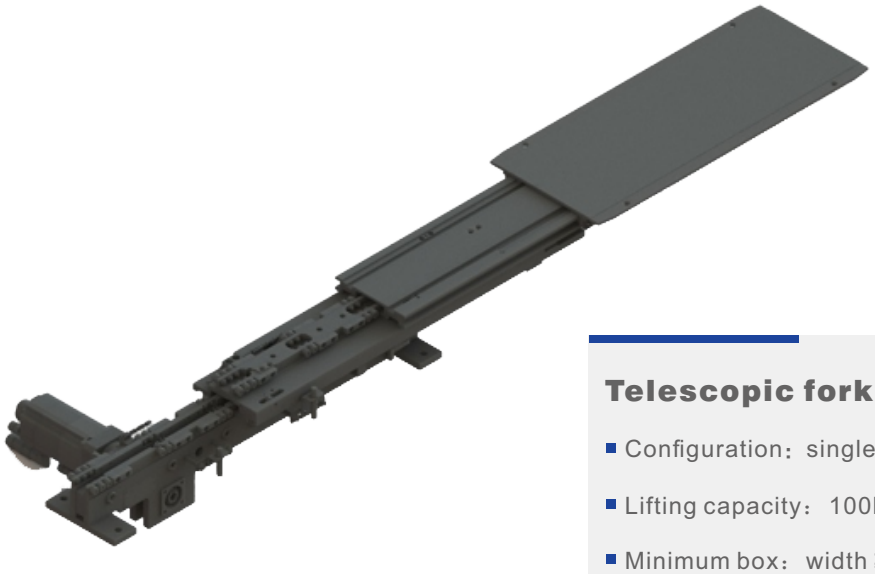

Telescopic forks

- Configuration：single-/double-deep
- Lifting capacity：100kg（MAX）
- Minimum box：width ≥350（mm）