YUN CANG
Lagersystem

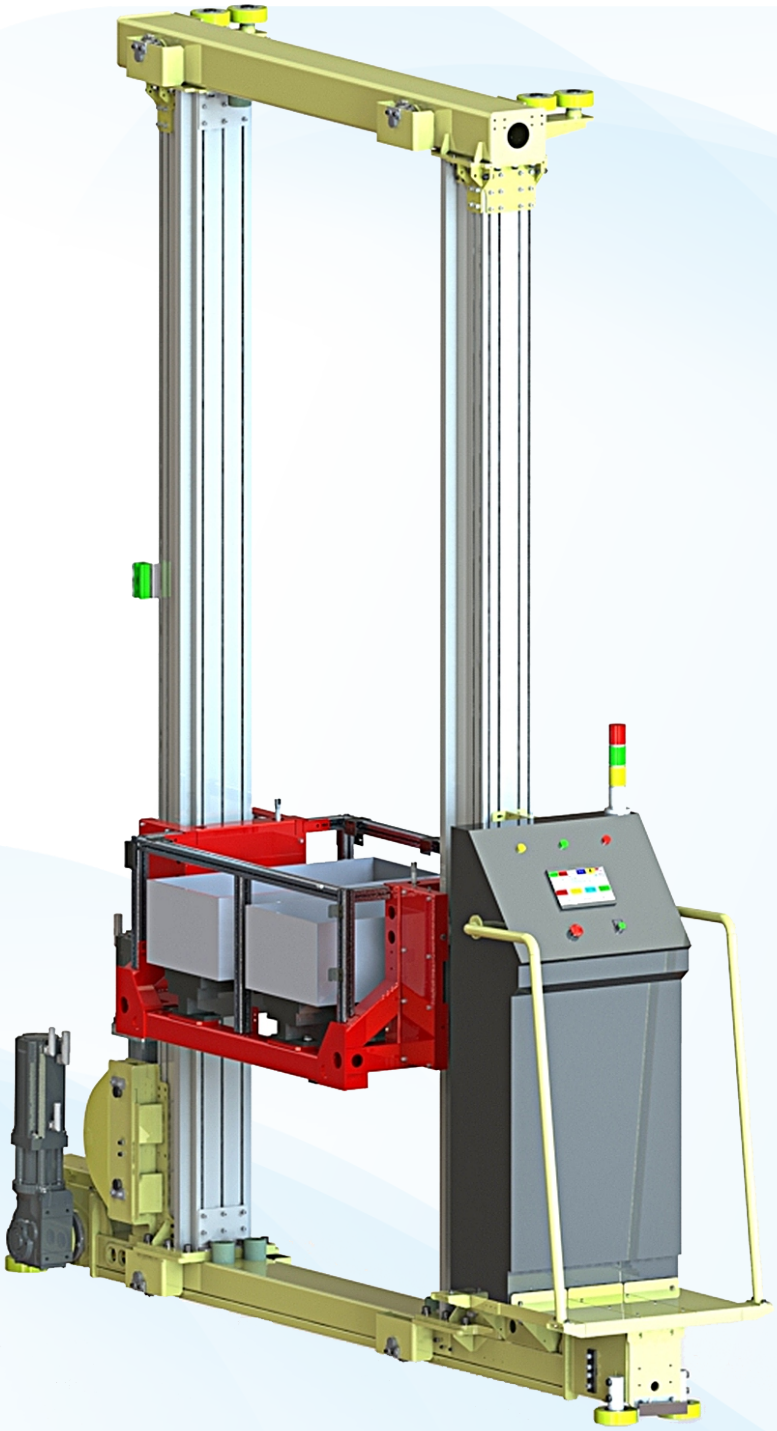

DOUBLE COLUMN
MINILOAD STACKER

Lighter Weight

The stacker crane achieves a lighter weight through a lightweight design, incorporating customized aluminum profiles for the mast and floor rails.

Quieter Operation

Featuring NDI polyurethane running and guide wheels, the stacker runs faster and quieter with silent chains(inverted tooth chain).

Higher Efficiency

Double driver system enables a maximum travel acceleration of up to 2.0 m/s²,and the dual-workstation design, making the stacker crane operate more efficiently.

Pre-loaded Control Program

Shipped with the control program pre-installed and simply debugged at the factory. Remote support is available for on-site commissioning.

Safer Operation

The dual-chain lifting system design with loose/broken chain protection and power-off braking for safer lifting operations.



Suitable for Cold Storage

From design to material and component selection, the stacker crane is adapted to low-temperature environments down to -25°C.
Stacker cranes can be used in cold storage environments.

DOUBLE COLUMN MINILOAD STACKER

Lifting stroke
up to 18.5 m

Lifting capacity
max. 500 kg

Picking devices
telescopic forks (single-/double-deep)
telescopic gripper arm
(single-/double-deep)

Number of positions
single position/double positions

Number of drive units
max. 2

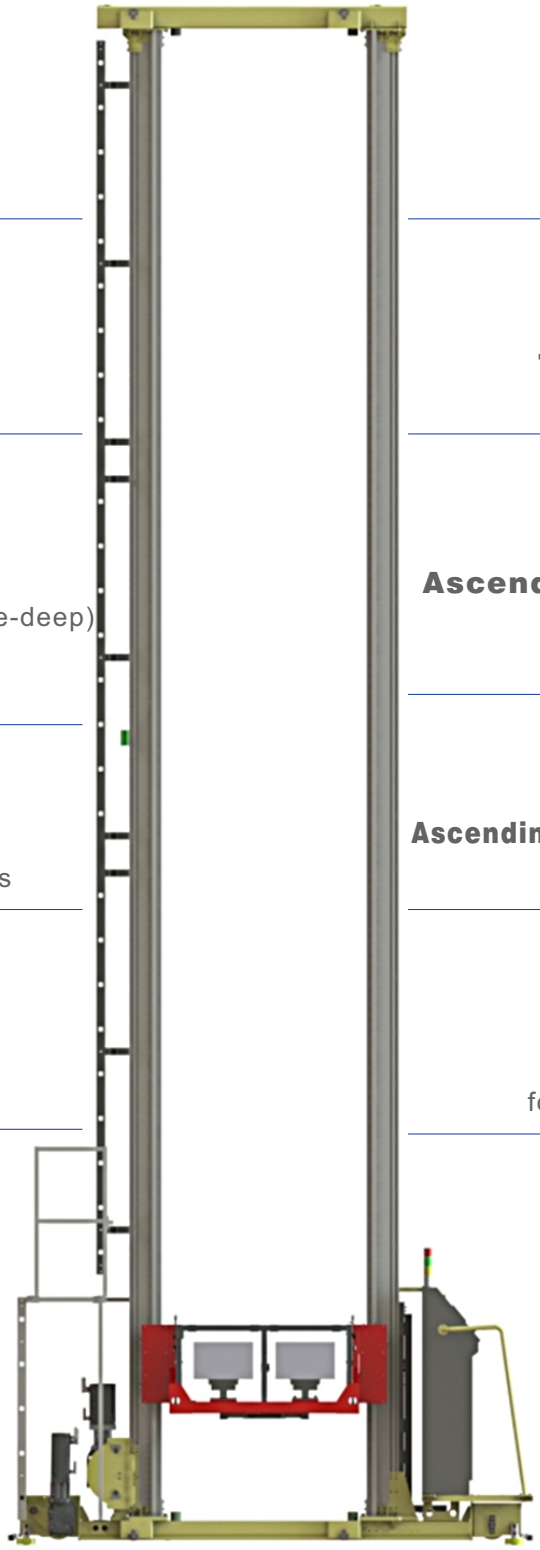

Traveling speed
max. 240 m/min

Traveling acceleration
max. 2.0 m/s2(double driver)

Ascending/descending speed
max. 180 m/min
(inverted tooth chain driver)

Ascending/descending acceleration
max. 3.0 m/s2

Cold store model
for temperatures down to -25 °C

DOUBLE COLUMN
MINILOAD STACKER

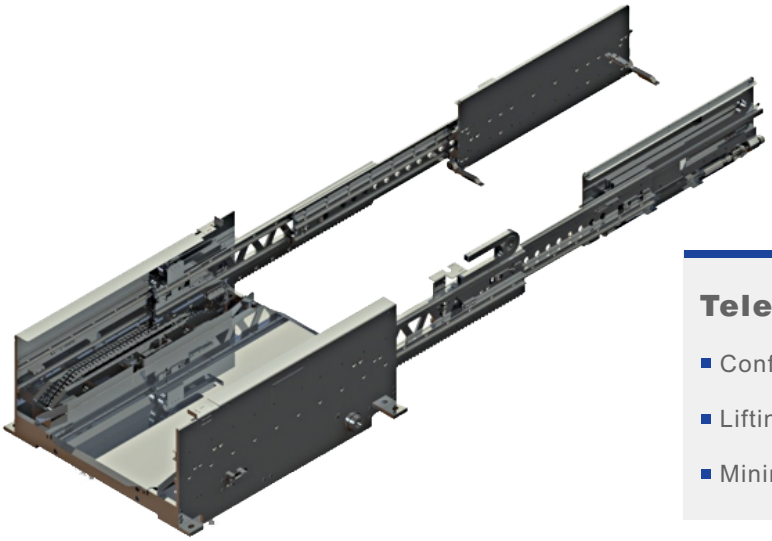

Telescopic gripper arm

- Configuration：single-/double-deep/ Variable-spacing
- Lifting capacity：50kg(MAX)
- Minimum box：300*200*60(mm)

Telescopic forks

- Configuration：single-/double-deep
- Lifting capacity：200kg(MAX)
- Minimum box：width ≥350(mm)

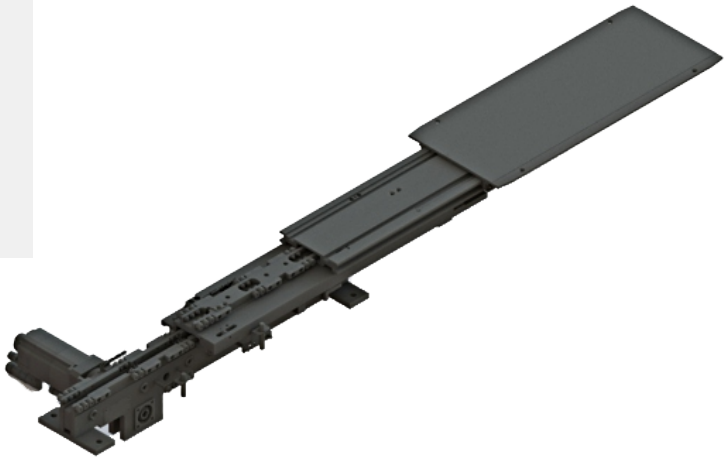



Double tines telescopic forks

- Configuration：single-deep Lifting
- capacity：500kg(MAX)